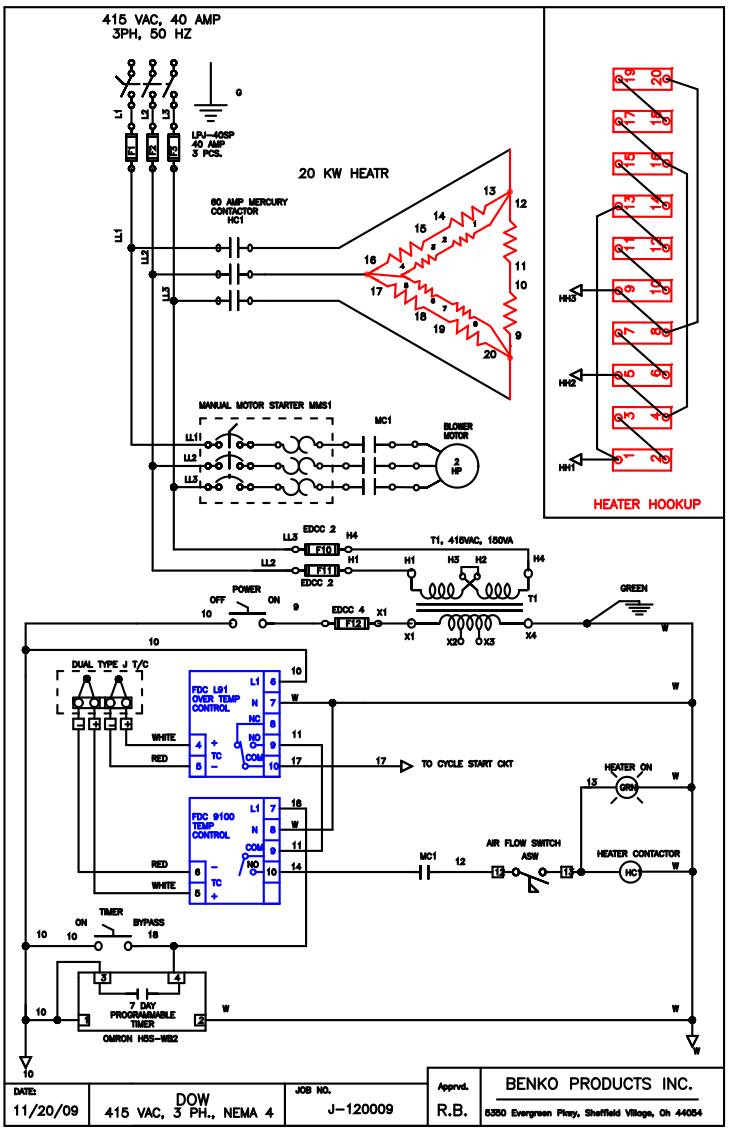

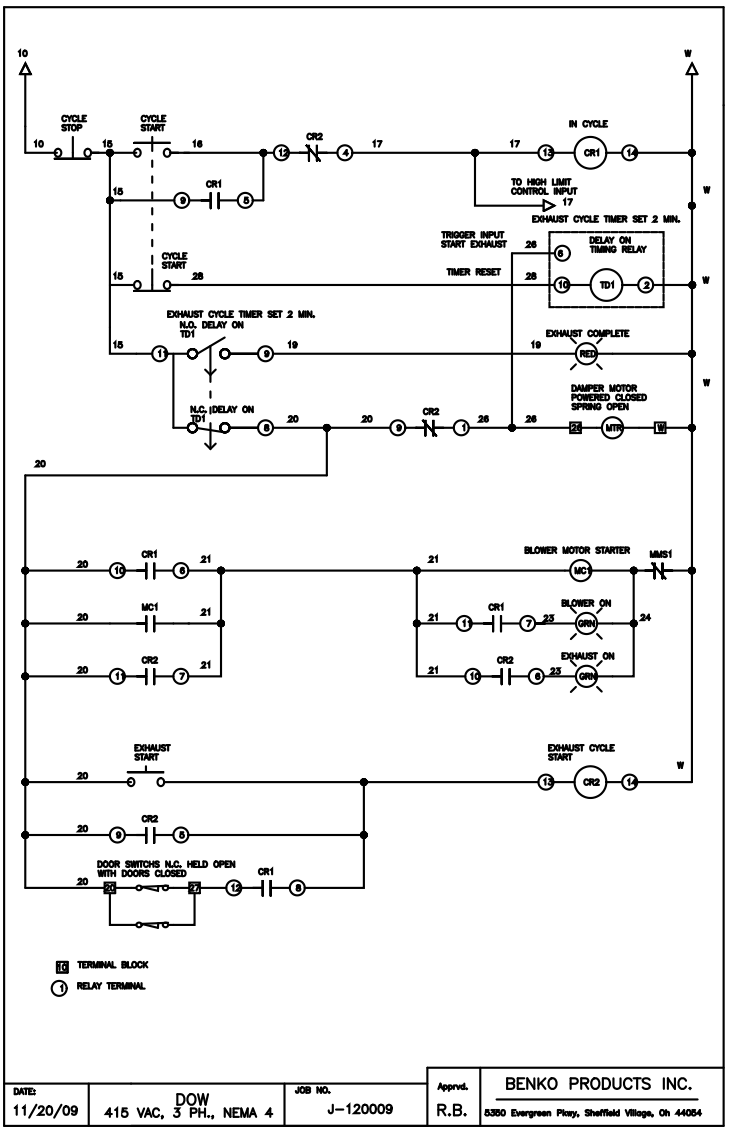

DATE:		JOB NO.	Apprvd.	
11/20/09	DOW 415 VAC, 3 PH., NEMA 4	J-120009	R.B.	BENKO PRODUCTS INC. 5350 Evergreen Pkwy, Sheffield Village, Oh 44054

DATE:		JOB NO.	Apprvd.	
11/20/09	DOW 415 VAC, 3 PH., NEMA 4	J-120009	R.B.	BENKO PRODUCTS INC. 5350 Evergreen Pkwy, Sheffield Village, Oh 44054