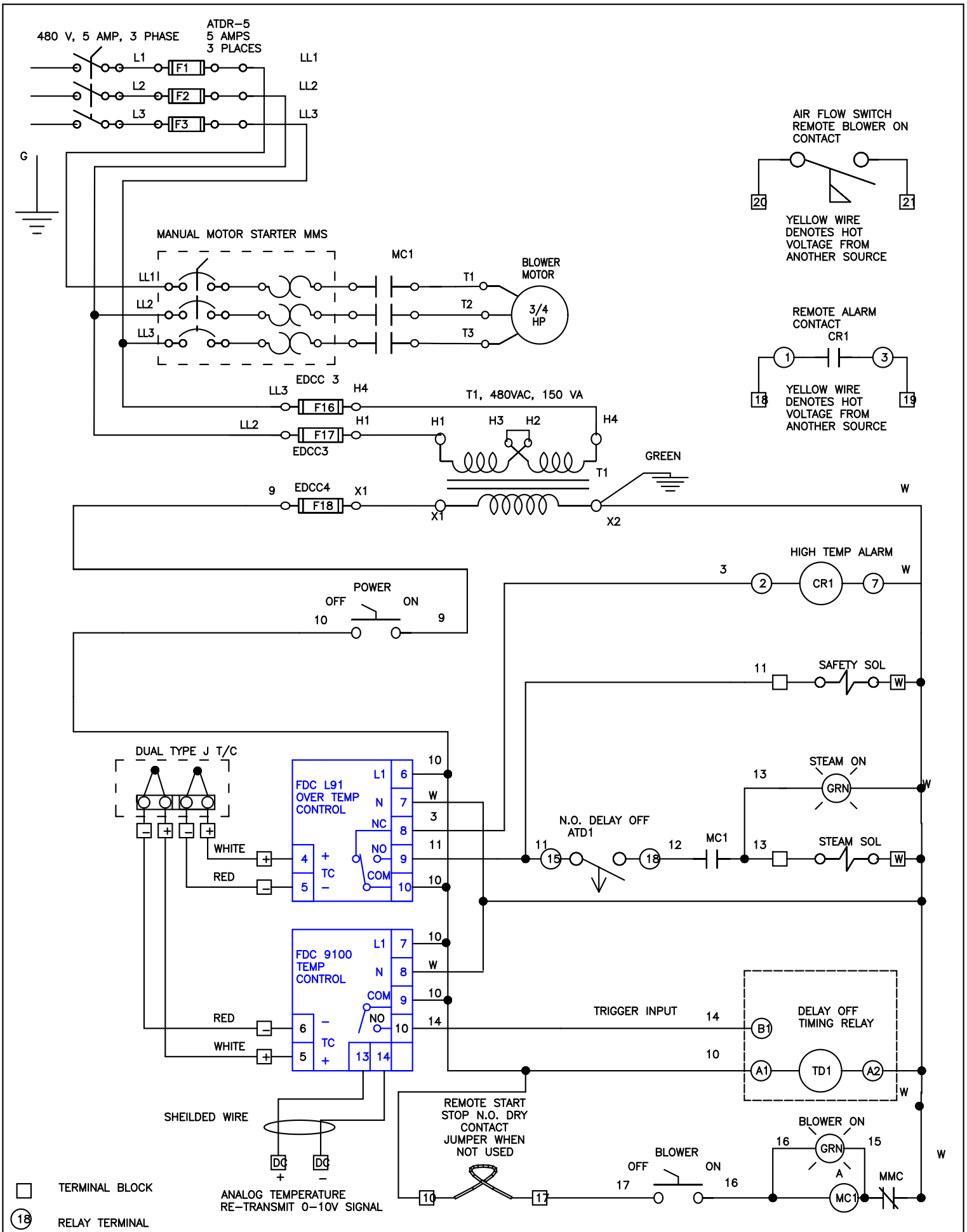

DATE:		JOB NO.	Apprvd.	
10/14/09	COLGATE 480 VAC, 3 PH. NEMA4SS	J-111209	R.B.	BENKO PRODUCTS INC. 5350 Evergreen Pkwy, Sheffield Village, Oh 44054