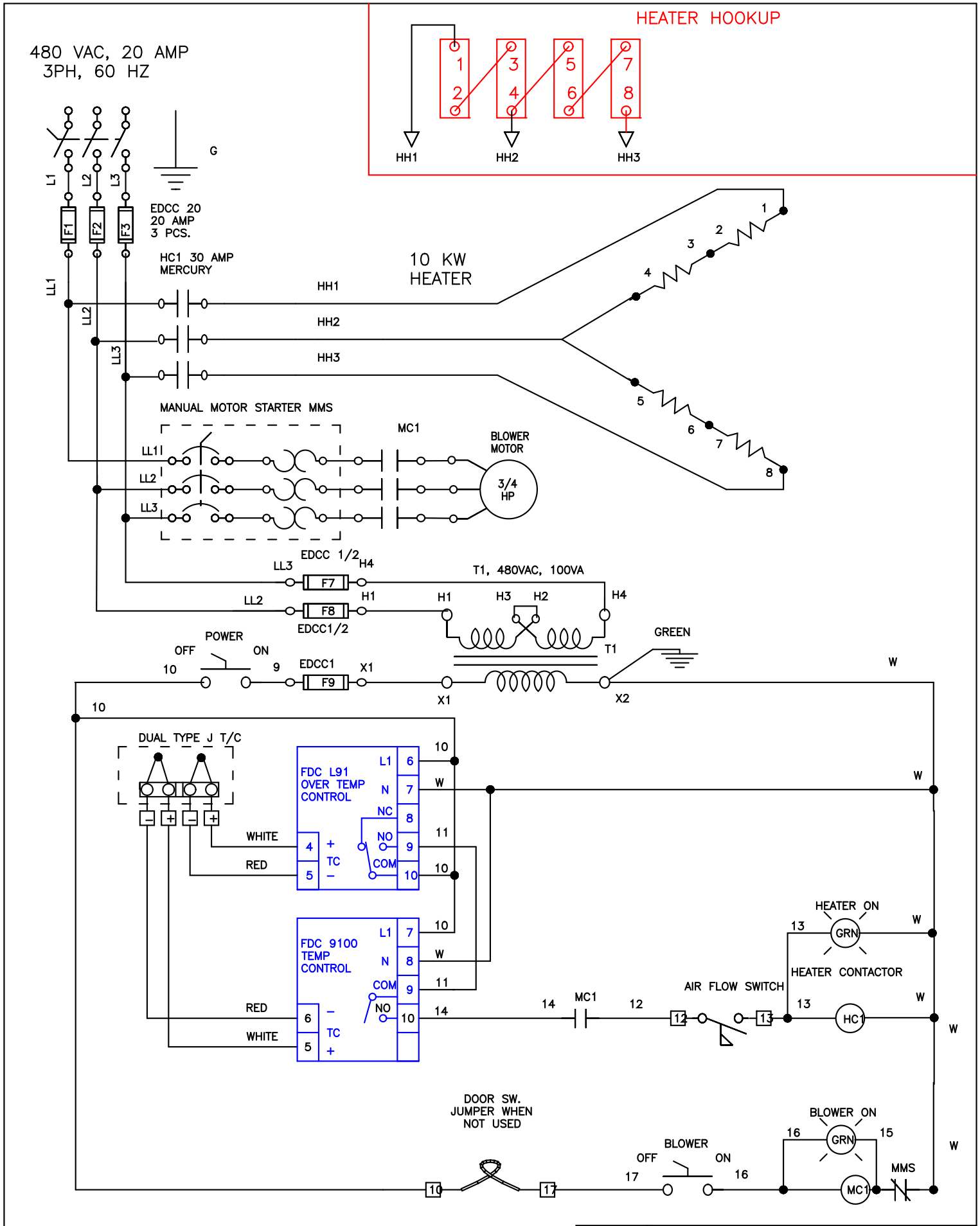

DATE:		JOB NO.	Apprvd.	
07/19/09	BRADFORD SOAP 480 VAC, 3 PH., NEMA 12	J-111109	R.B.	BENKO PRODUCTS INC. 5350 Evergreen Pkwy, Sheffield Village, Oh 44054