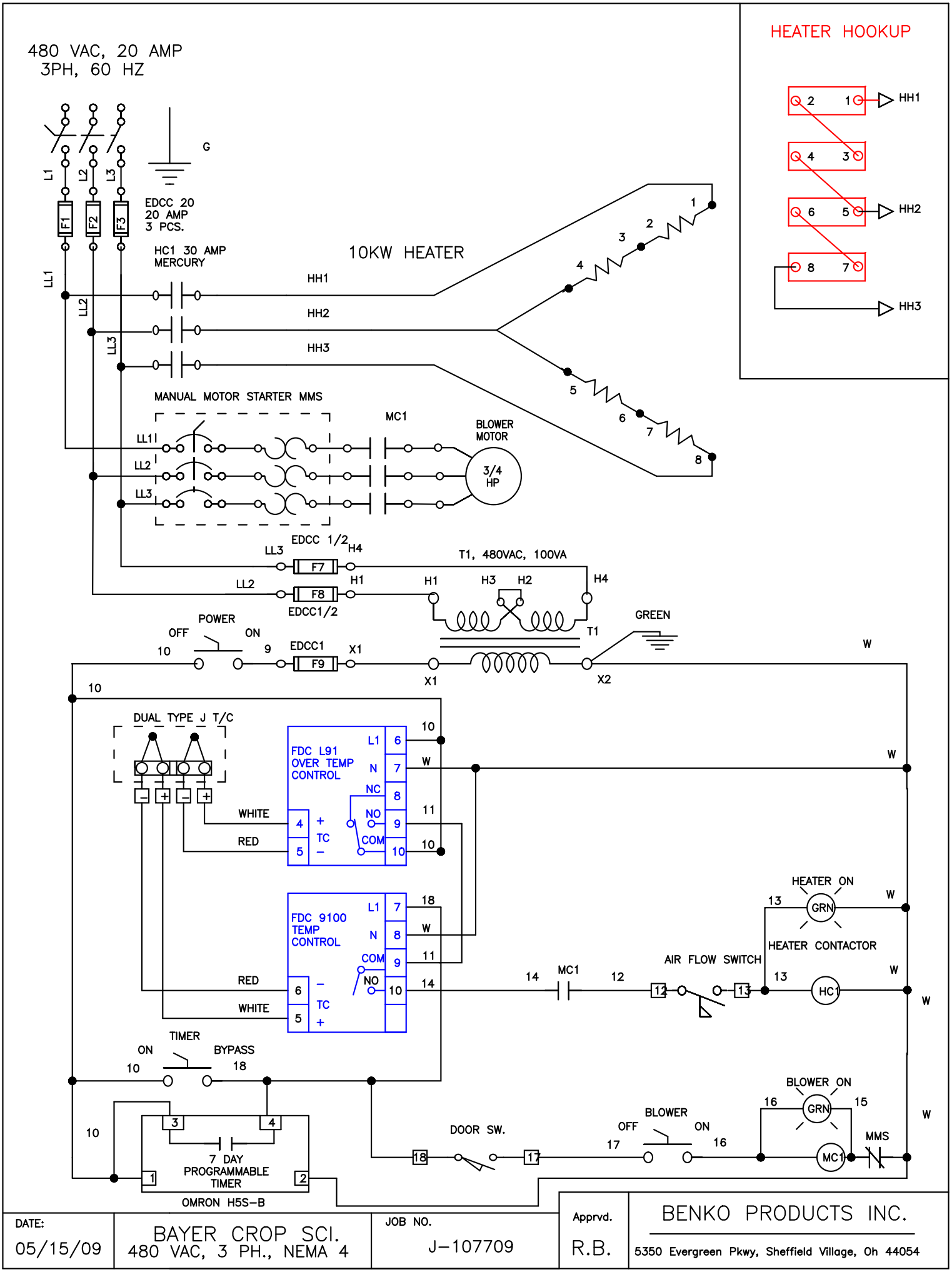

DATE:		JOB NO.	Apprvd.	
05/15/09	BAYER CROP SCI. 480 VAC, 3 PH., NEMA 4	J-107709	R.B.	BENKO PRODUCTS INC. 5350 Evergreen Pkwy, Sheffield Village, Oh 44054