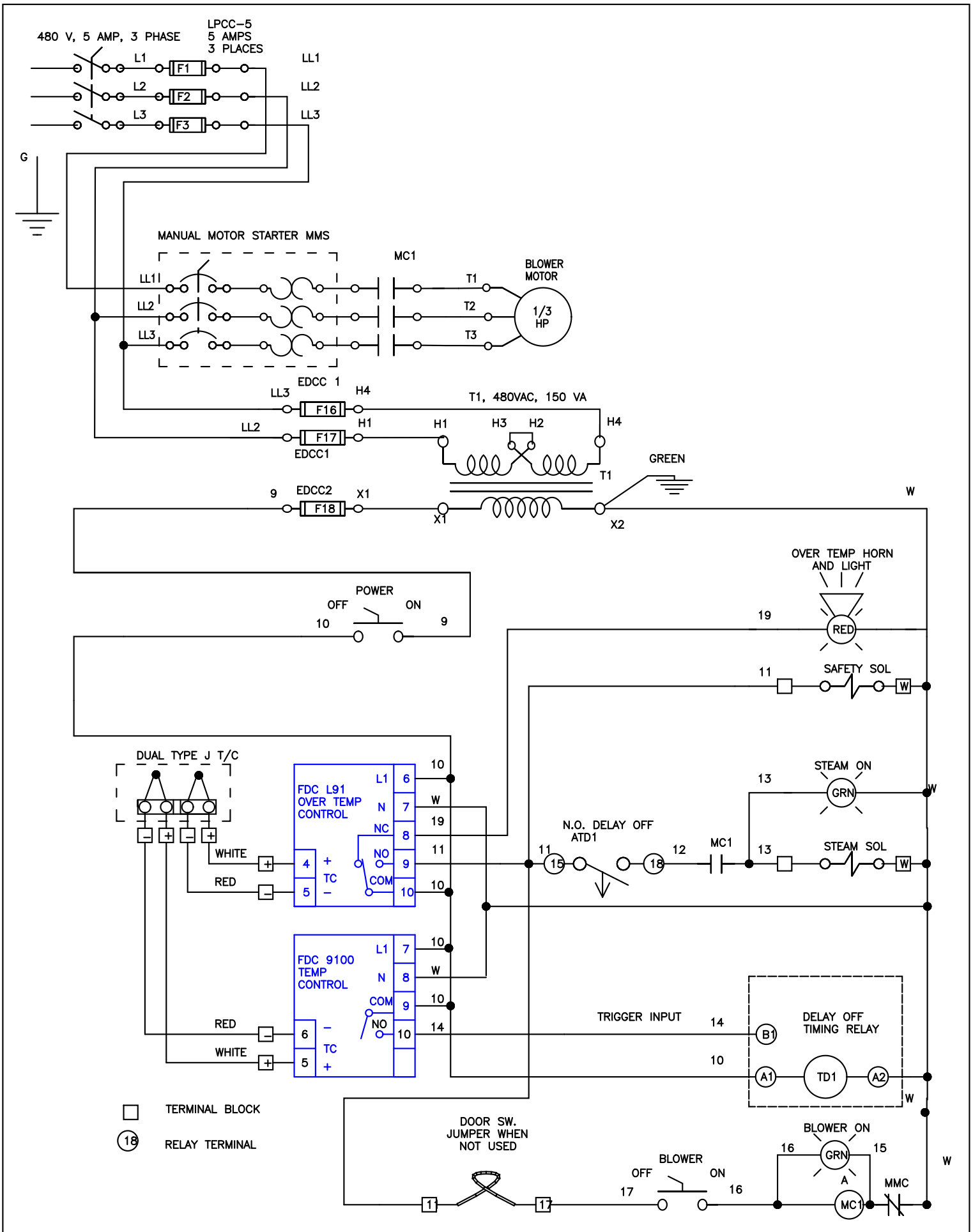

DATE:		JOB NO.	Apprvd.	BENKO PRODUCTS INC.
03/30/09	ATK 480 VAC, 3 PH.	J-105209	R.B.	5350 Evergreen Pkwy, Sheffield Village, Oh 44054