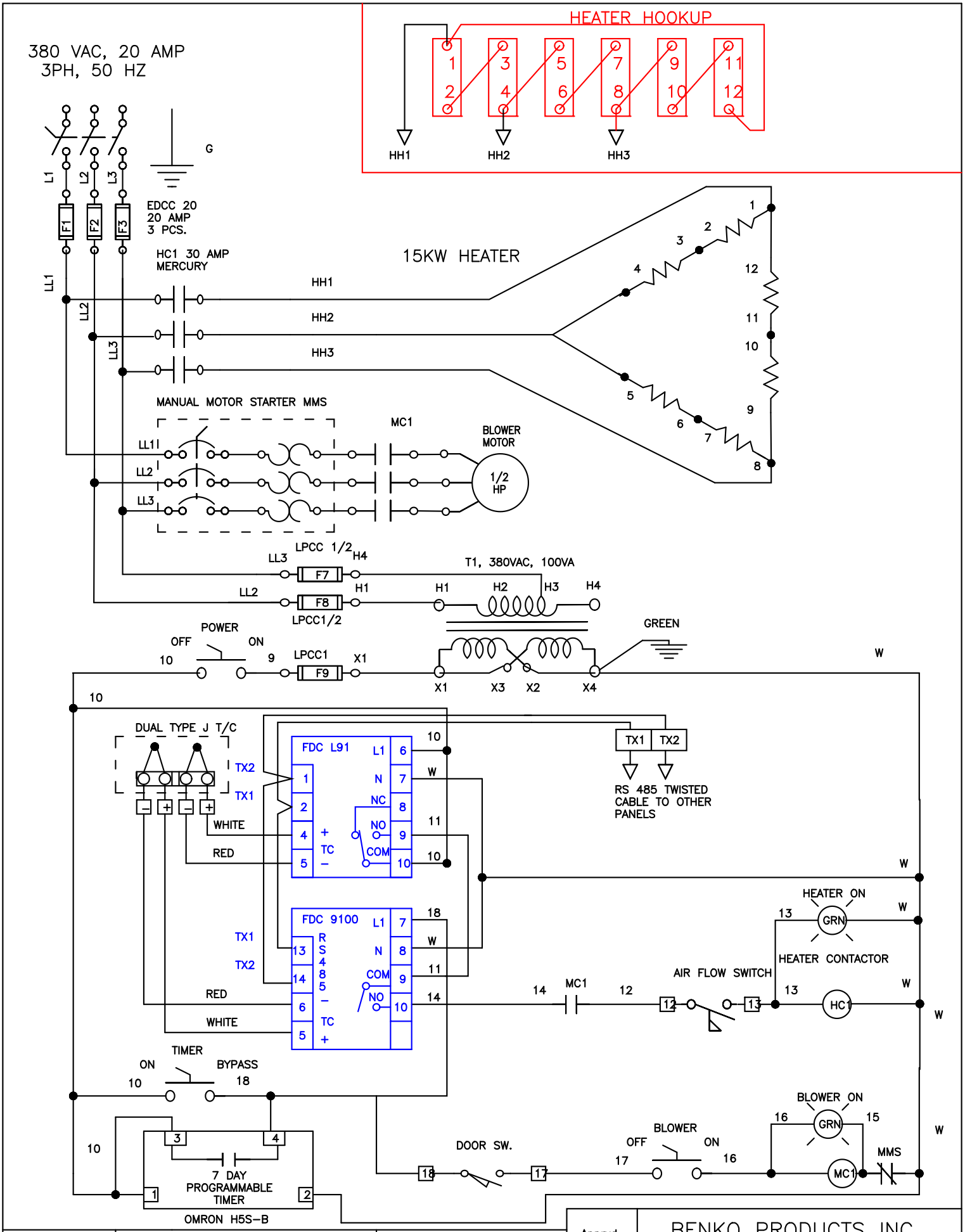

DATE:		JOB NO.	Apprvd.	
03/05/09	CYTEC 380 VAC, 3 PH., NEMA 12	J-101409 B	R.B.	BENKO PRODUCTS INC. 5350 Evergreen Pkwy, Sheffield Village, Oh 44054