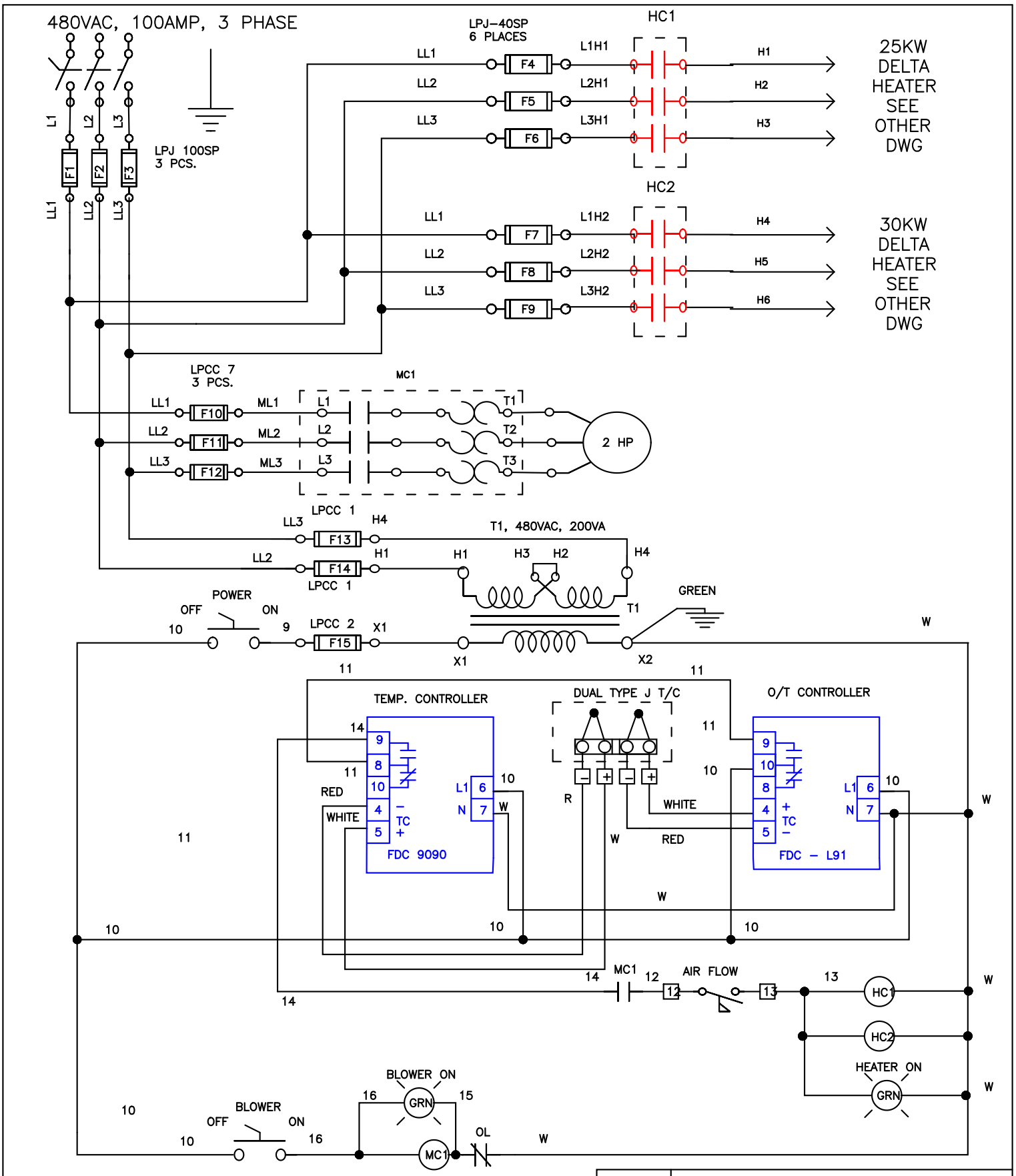

DATE:		JOB NO.	Apprvd.	
05/20/05	DAY INTERNATIONAL 480 VAC, 3 PH., NEMA 12	V-115705	R.B.	BENKO PRODUCTS INC. 5350 Evergreen Pkwy, Sheffield Village, Oh 44054