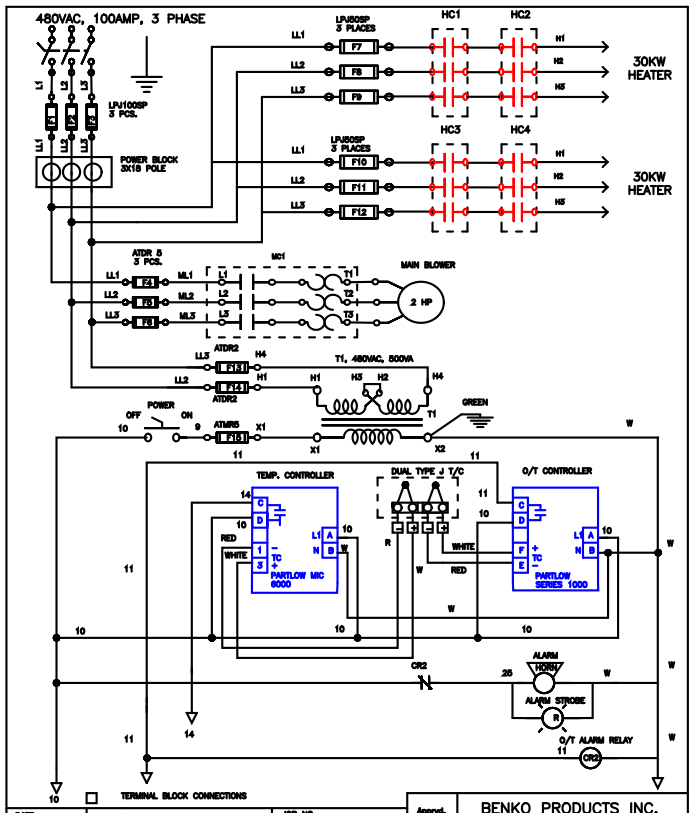
480VAC, 100AMP, 3 PHASE
LPJ100SP 3 PCS.
POWER BLOCK 3X18 POLE
LPJ50SP 3 PLACES
HC1
HC2
HC3
HC4
30KW HEATER
30KW HEATER
ATDR 5 3 PCS.
MC1
MAIN BLOWER
2 HP
ATDR2
T1, 480VAC, 500VA
POWER
OFF
ON
ATMR5
GREEN
TEMP. CONTROLLER
DUAL TYPE J T/C
O/T CONTROLLER
PARTLOW MIC 6000
PARTLOW SERIES 1000
RED
WHITE
ALARM HORN
ALARM STROBE
O/T ALARM RELAY
CR2
TERMINAL BLOCK CONNECTIONS
DATE: 04/19/04
POLYGON
480 VAC, 3 PH., NEMA 12
JOB NO. V-105304
Apprvd. R.B.
BENKO PRODUCTS INC.
5350 Evergreen Pkwy, Sheffield Village, Oh 44054

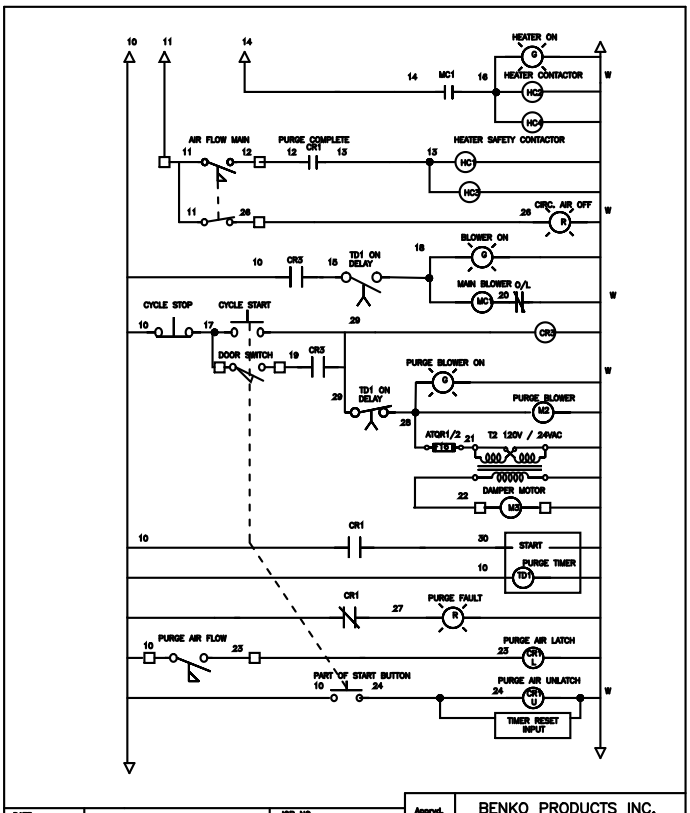
HEATER ON
HEATER CONTACTOR
AIR FLOW MAIN
PURGE COMPLETE
HEATER SAFETY CONTACTOR
CIRC. AIR OFF
BLOWER ON
TD1 ON DELAY
MAIN BLOWER O/L
CYCLE STOP
CYCLE START
DOOR SWITCH
PURGE BLOWER ON
PURGE BLOWER
T2 120V / 24VAC
DAMPER MOTOR
START
PURGE TIMER
PURGE FAULT
PURGE AIR FLOW
PURGE AIR LATCH
PART OF START BUTTON
PURGE AIR UNLATCH
TIMER RESET INPUT
DATE: 04/19/04
POLYGON
480 VAC, 3 PH., NEMA 12
JOB NO. V-105304
Apprvd. R.B.
BENKO PRODUCTS INC.
5350 Evergreen Pkwy, Sheffield Village, Oh 44054