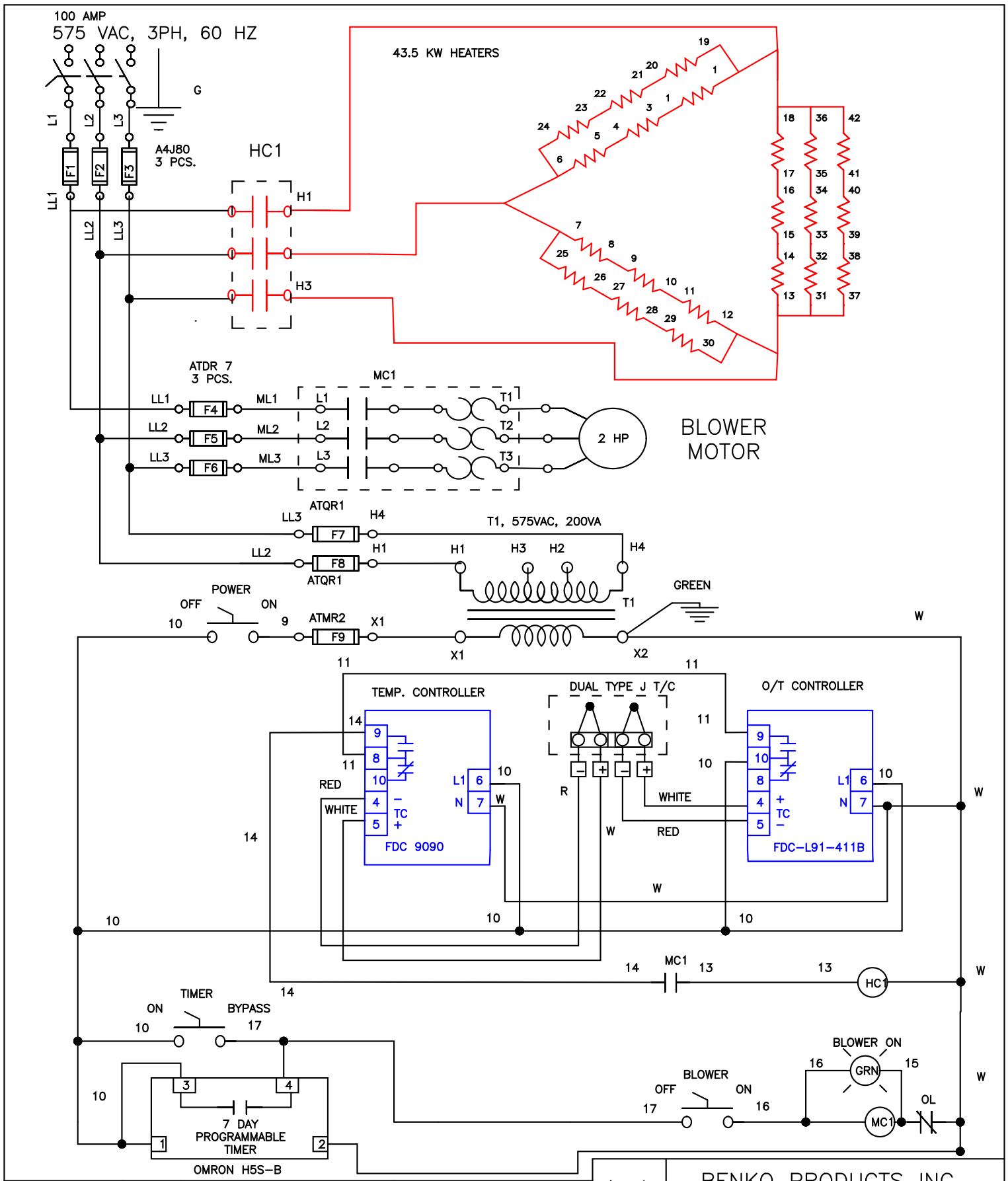

DATE:		JOB NO.	Apprvd.	
12/09/03	J.P. NORTH AMERICA 575 VAC, 3 PH., NEMA 12	J-132103	R.B.	BENKO PRODUCTS INC. 5350 Evergreen Pkwy, Sheffield Village, Oh 44054