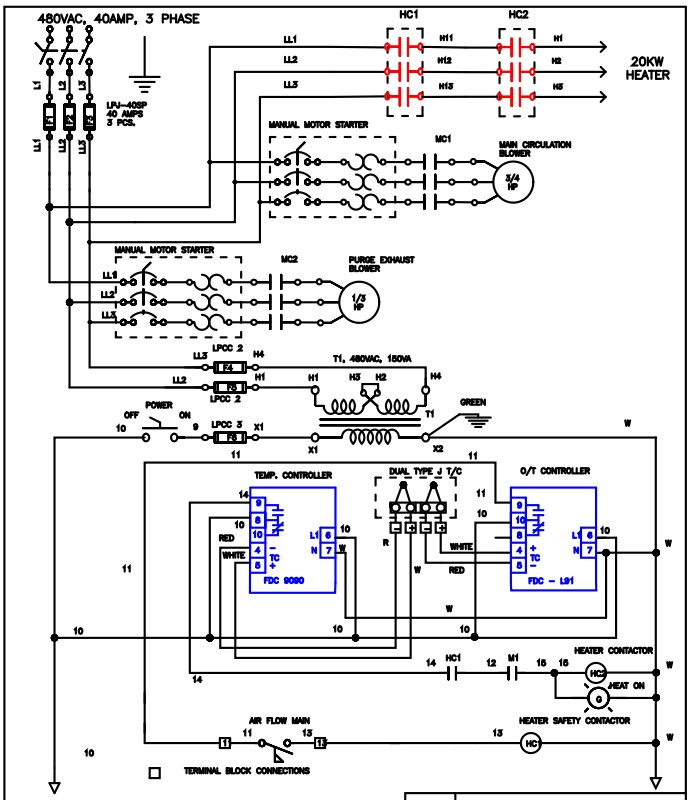

DATE:		JOB NO.	Apprvd.	
11/17/08	CONTRACT PACKAGING 480 VAC, 3 PH., NEMA 12	J-128508	R.B.	BENKO PRODUCTS INC. 5350 Evergreen Pkwy, Sheffield Village, Oh 44054

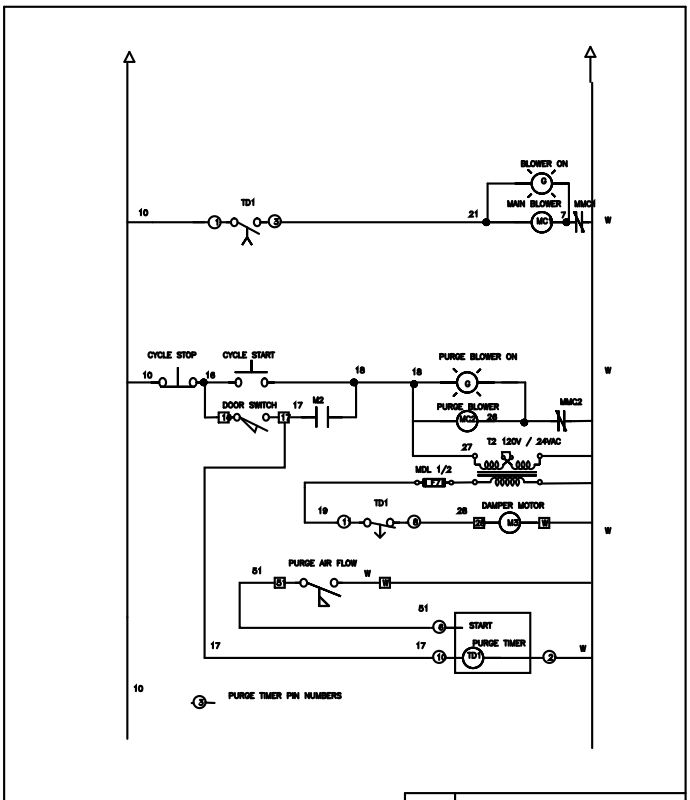

DATE:		JOB NO.	Apprvd.	
11/17/08	CONTRACT PACKAGING 480 VAC, 3 PH., NEMA 12	J-128508	R.B.	BENKO PRODUCTS INC. 5350 Evergreen Pkwy, Sheffield Village, Oh 44054