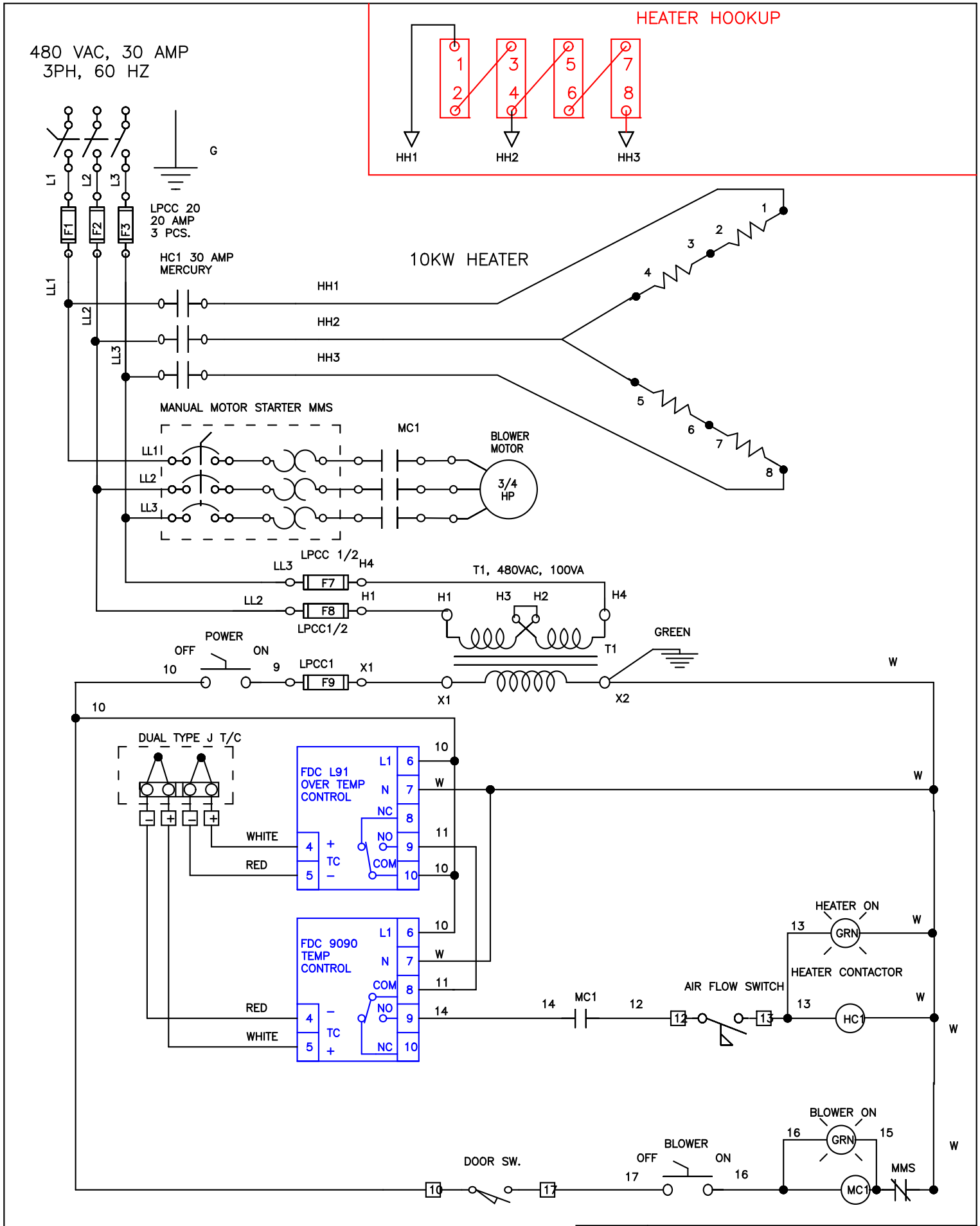

DATE:		JOB NO.	Apprvd.	
06/13/08	THE DENNIS GROUP 480 VAC, 3 PH., NEMA 4XSS	J-112108-B	R.B.	BENKO PRODUCTS INC. 5350 Evergreen Pkwy, Sheffield Village, Oh 44054