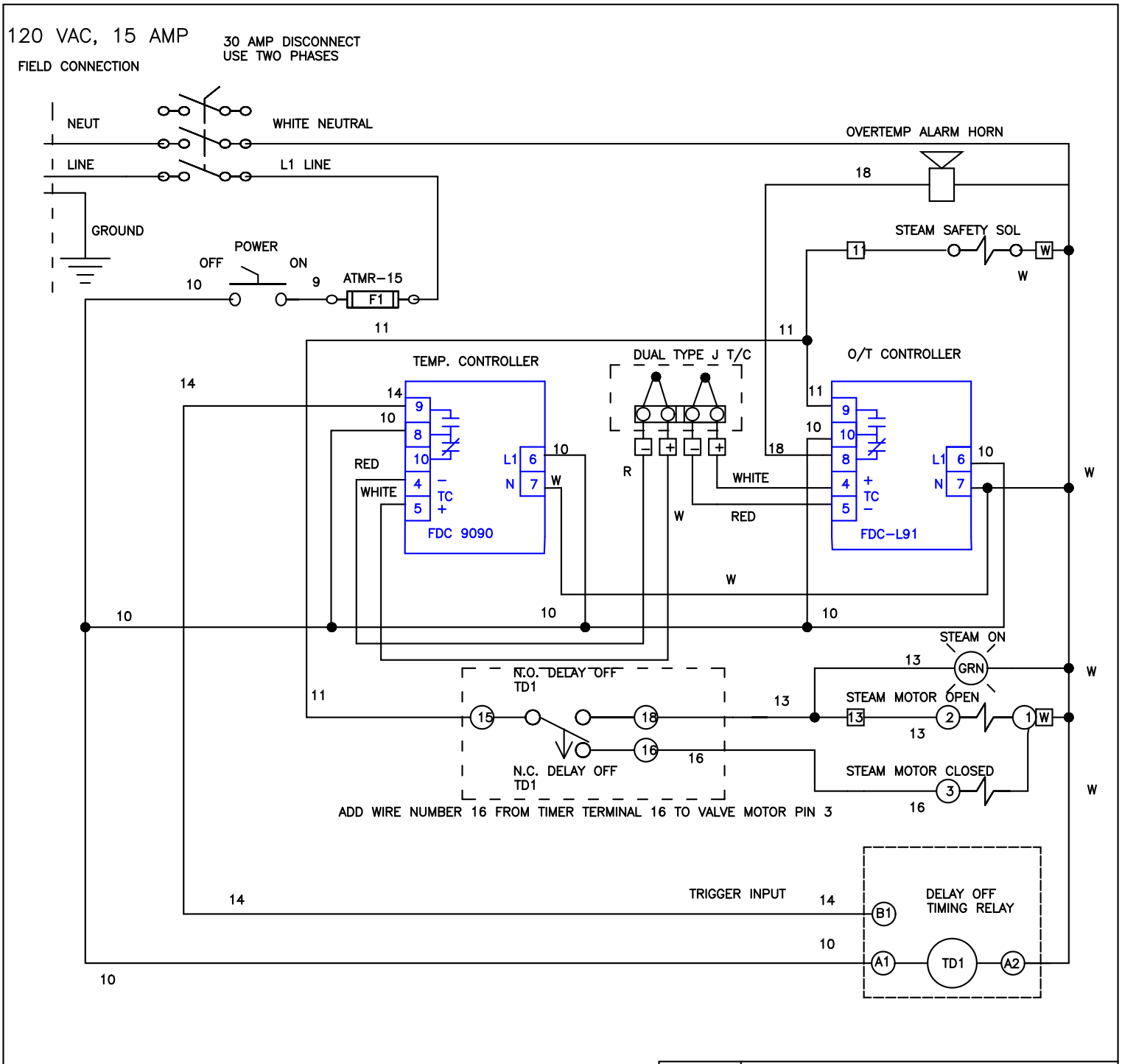

DATE:		JOB NO.	Apprvd.	BENKO PRODUCTS INC.
04/05/08	CIBA 120 VAC, 1 PH., NEMA 12	J-108908	R.B.	5350 Evergreen Pkwy, Sheffield Village, Oh 44054