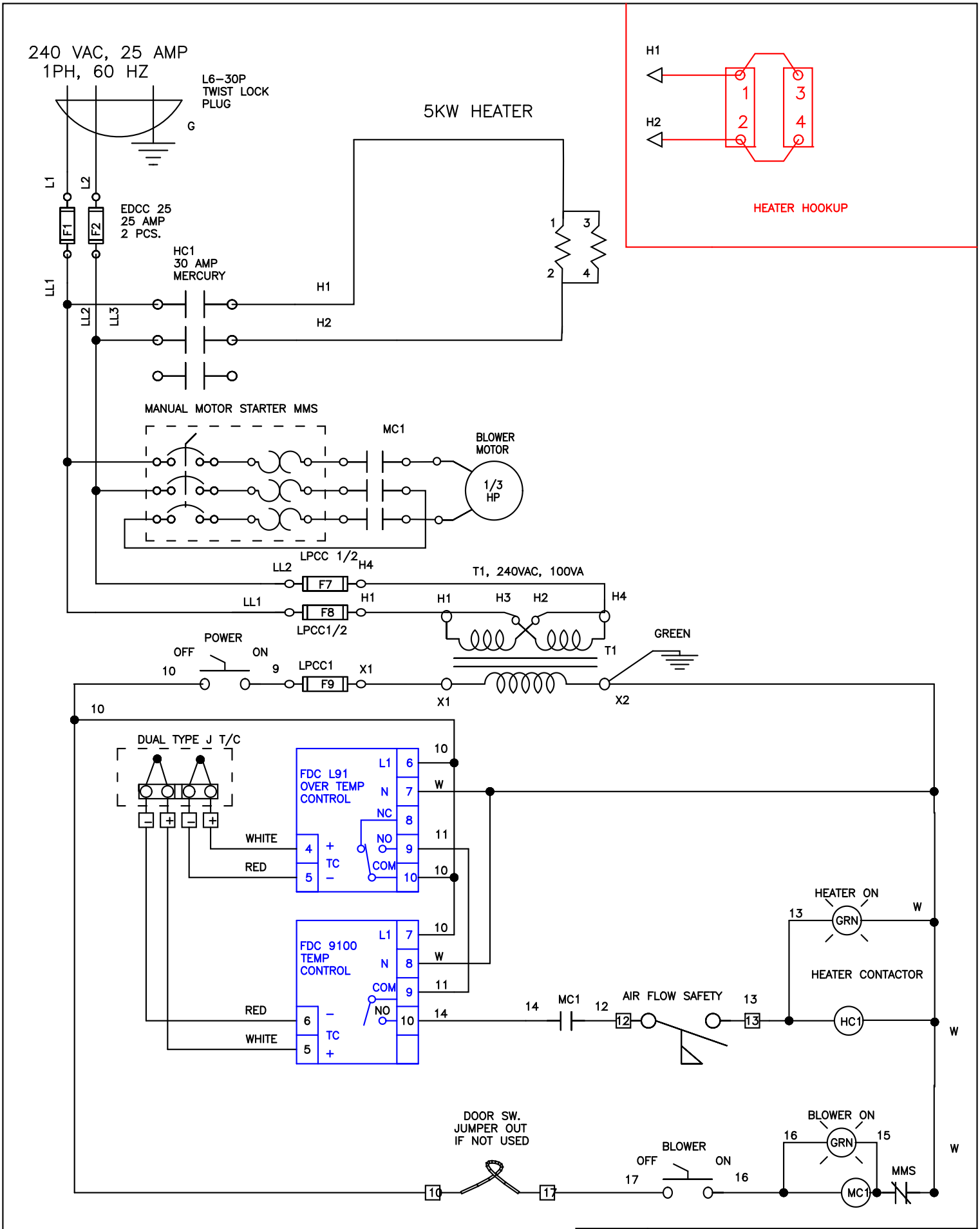

DATE:	SCMIDT APELERIES	JOB NO.	Apprvd.	BENKO PRODUCTS INC.
04/13/09	240 VAC, 1 PH., NEMA 12	J-107109	R.B.	5350 Evergreen Pkwy, Sheffield Village, Oh 44054