120 VAC, 15 AMP

FIELD CONNECTION

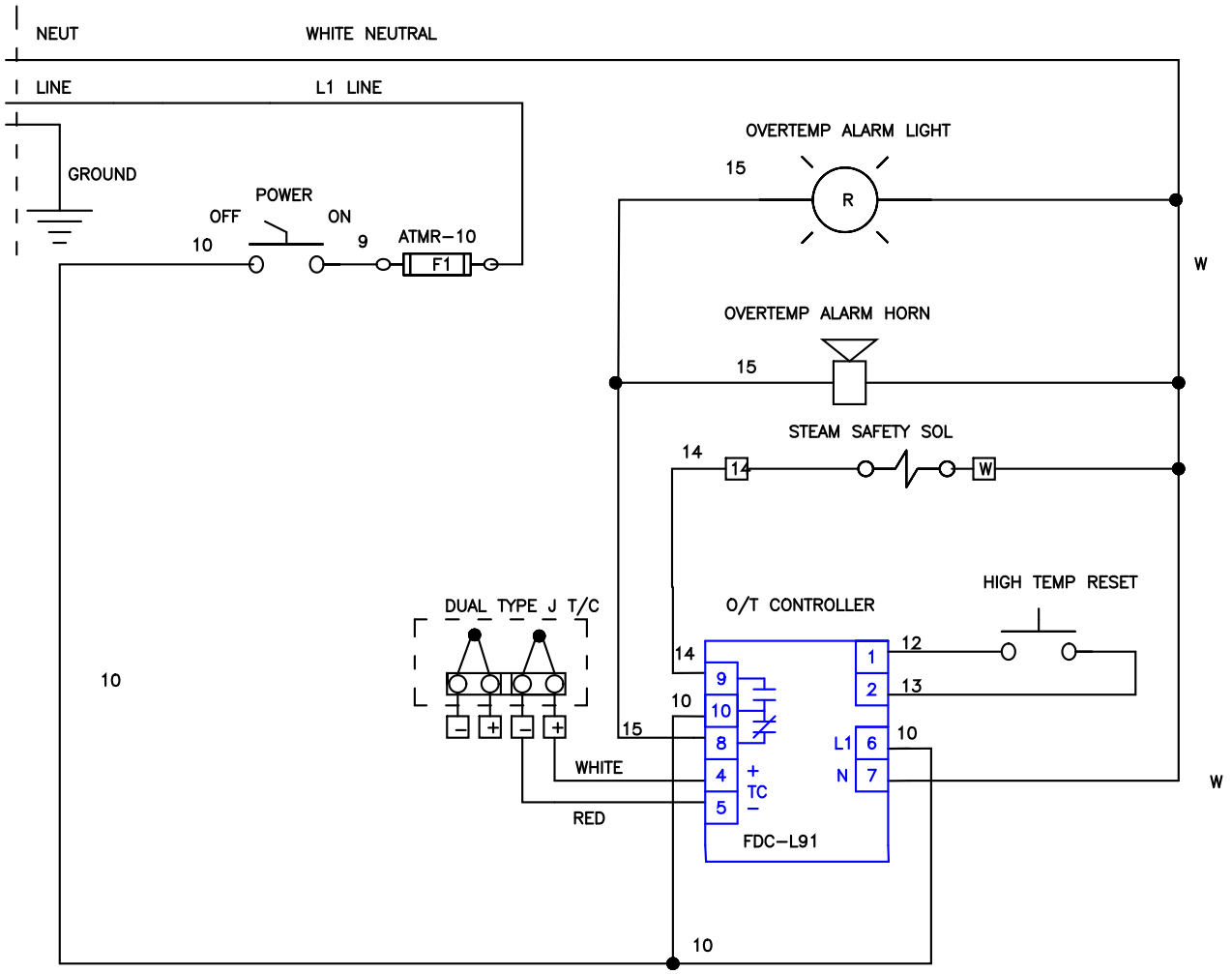

DATE:		JOB NO.	Apprvd.	
04/15/08	AIR PRODUCTS 120 VAC, 1 PH., NEMA 12	J-104608	R.B.	BENKO PRODUCTS INC. 5350 Evergreen Pkwy, Sheffield Village, Oh 44054